(Pages : 3) **2080**

Reg. No. : .....

Name : .....

Seventh Semester B.Tech. Degree Examination, April/May 2012
(2003 Scheme)
Branch : ELECTRICAL
03.702 : Control Systems (E)

Time: 3 Hours Max. Marks: 100

PART – A

Answer **all** questions in Part **A**. **Each** question carries **4** marks.

1. Explain the merits and demerits of open loop and closed loop systems.
2. What do you mean by poles and zeros of a transfer function ? Briefly explain how they influence the performance of a system.
3. State and explain Routh's stability criterion.
4. Find the range of K for which the system whose characteristic equation is given by

   $s^4 + 3s^3 + 3s^2 + 2s + K = 0$, is stable.
5. Explain the working of a tachogenerator.
6. Explain force-current and force-voltage analogy.
7. What are dynamic error coefficients ? What are their merits ?
8. Explain the significance of Gain margin and Phase margin.
9. Explain frequency domain specifications.
10. What are compensators ? Explain. **(10×4=40 Marks)**

P.T.O.

PART – B

Answer **any one full** question from **each** Module. **Each** question carries **20** marks.

Module – I

11. a) State and explain Mason's gain formula.

b) Find the transfer function by using signal flow graph method for the system given below :

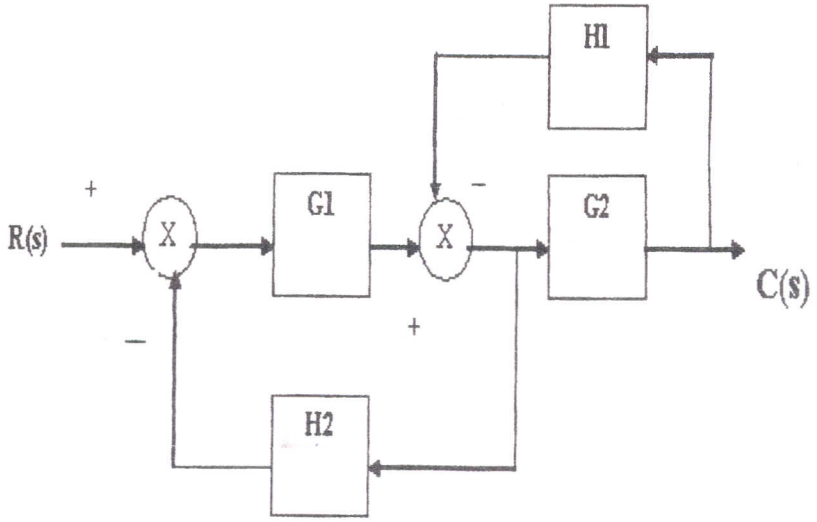

OR

12. a) Derive the transfer function of a field controlled DC servomotor.

b) Find the transfer function $X_2(s)/F(s)$, for the given mechanical system.

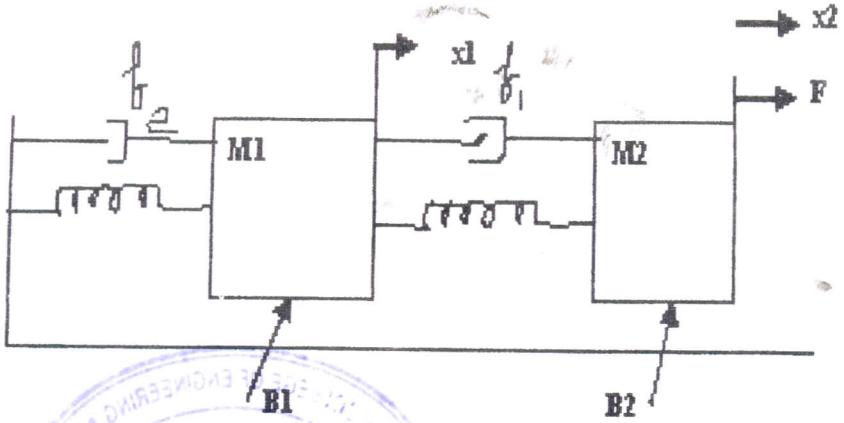

Module – II

13. a) What are PID controllers ? Explain.

b) The closed loop transfer function of a system is given by $\frac{25}{s^2 + 6s + 25}$. Find all time response specifications.

OR

14. a) Explain the effect of adding zeros and poles on the performance of a system.

b) A unity feedback control system has an open loop transfer function $G(s)\,H(s) = \frac{K(s+1)}{s(s-1)}$. Sketch the root locus and show that the loci of complex roots are part of a circle. Find :

a) Centre and radius of the circle

b) Damping co-efficient for $K = 3$.

Module – III

15. a) Explain the following :

a) Non-minimum phase systems

b) Transportation lag

c) Log Magnitude Vs Phase plot.

b) Sketch the polar plot for $G(s)\,H(s) = \frac{10}{s(s+1)(s+2)}$. Comment on the relative stability of the system.

OR

16. a) Explain how frequency domain analysis is useful for design of compensators.

b) A unity feedback control system has an open loop transfer function $G(s)\,H(s) = \frac{K}{s(s+1)}$. Sketch the complete Nyquist plot and check the stability of the system.